KFC-1371

SERVICE MANUAL

KENWOOD

© 1987-5 PRINTED IN JAPAN
B51-3258-00 (G) 1137

EXTERNAL VIEW

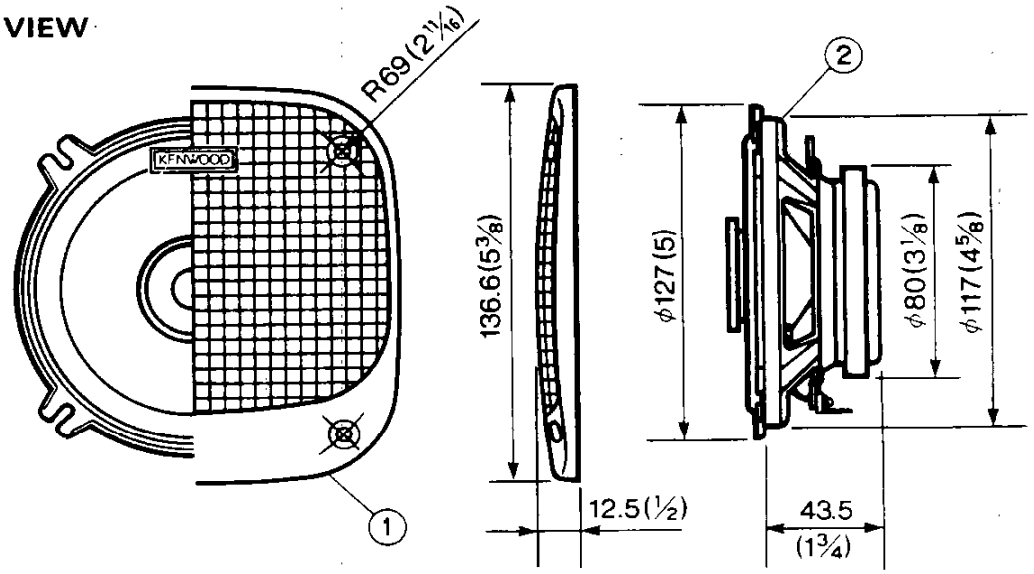

Unit: mm (inch)

SPECIFICATIONS

Speakers
- Woofer ____ 170g (6 oz) Magnet
  12cm (5") Water-resistant cone
- Tweeter ____ 41 mm (1 5/8") cone

Peak power ____ 45 watts
Sensitivity ____ 90 dB/w at 1m
Impedance ____ 4 ohms
Insulated cable ____ 4.5m (14.7 ft³) 2 pcs
Weight per speaker with grille ____ 610g (1 lb 6 oz)

PARTS LIST

* New Parts
Parts without **Parts No.** are not supplied.
Les articles non mentionnes dans le **Parts No.** ne sont pas fournis.
Teile ohne **Parts No.** werden nicht geliefert.

Ref.No.	New Parts	Parts No.	Description
①	*	B06-0268-08	FRONT GRILLE
		E30-1187-08	SPEAKER CORD SET
		N99-1050-08	SCREW SET
②	*	T15-0098-08	SPEAKER